WELDING AND CUTTING TOTAL SOLUTION

OWNERS MANUAL

INVERMIG WI SERIES

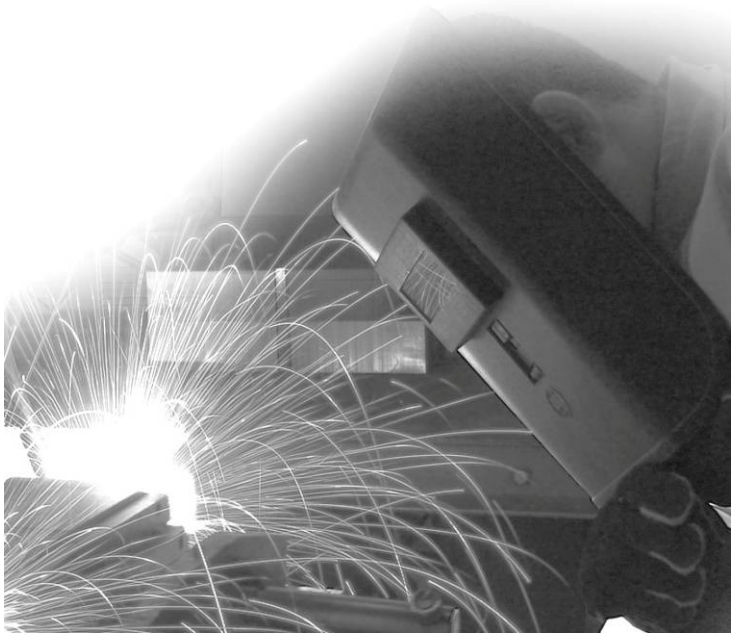

WARNING:

Read carefully and understand all **ASSEMBLY AND OPERATION INSTRUCTIONS** before operating. Failure to follow the safety rules and other basic safety precautions may result in serious personal injury.

GENERAL SAFETY RULES

WARNING: Read and understand all instructions. Failure to follow all instructions listed below may result in serious injury.

CAUTION: Do not allow persons to operate or assemble this INVERMIG WI SERIES until they have read this manual and have developed a thorough understanding of how the INVERMIG WI SERIES works.

WARNING: The warnings, cautions, and instructions discussed in this instruction manual cannot cover all possible conditions or situations that could occur. It must be understood by the operator that common sense and caution are factors which cannot be built into this product, but must be supplied by the operator.

SAVE THESE INSTRUCTIONS

IMPORTANT SAFETY CONSIDERATIONS

1.1 Your Welding Environment

-Keep the environment you will be welding in free from flammable materials.
-Always keep a fire extinguisher accessible to your welding environment.
-Always have a qualified person install and operate this equipment.
-Make sure the area is clean, dry and ventilated. Do not operate the welder in humid, wet or poorly ventilated areas.
-Always have your welder maintained by a qualified technician in accordance with local, state and national codes.
-Always be aware of your work environment. Be sure to keep other people, especially children, away from you while welding.
-Keep harmful arc rays shielded from the view of others.
-Mount the welder on a secure bench
or cart that will keep the welder secure and prevent it from tipping over or falling.

1.2 Your Welder's Condition

-Check ground cable, power cord and welding cable to be sure the insulation is not damaged. Always replace or repair damaged components before using the welder.
-Check all components to ensure they are clean and in good operating condition before use.

1.3 Use of Your Welder

⚠ CAUTION

Do not operate the welder if the output cable, electrode, torch, wire or wire feed system is wet. Do not

immerse them in water. These components and the welder must be completely dry before attempting to use them.
-Follow the instructions in this manual.
-Keep welder in the off position when not in use.
-Connect ground lead as close to the area being welded as possible to ensure a good ground.
-Do not allow any body part to come in contact with the welding wire if you are in contact with the material being welded, ground or electrode from another welder.
-Do not weld if you are in an awkward position. Always have a secure stance while welding to prevent accidents. Wear a safety harness if working above ground.
-Do not drape cables over or around your body.
-Wear a full coverage helmet with appropriate shade (see ANSI Z87.1 safety standard) and safety glasses while welding.
-Wear proper gloves and protective clothing to prevent your skin from being exposed to hot metals, UV and IR rays.
-Do not overuse or overheat your welder. Allow proper cooling time between duty cycles.
-Keep hands and fingers away from moving parts and stay away from the drive rolls.
-Do not point torch at any body part of yourself or anyone else.
-Always use this welder in the rated duty cycle to prevent excessive heat and failure.

1.4 Specific Areas of Danger, Caution or Warning

Electrical Shock

⚠WARNING

Electric arc welders can produce a shock that can cause injury or death. Touching electrically live parts can cause fatal shocks and severe burns. While welding, all metal components connected to the wire are electrically hot. Poor ground connections are a hazard, so secure the ground lead before welding.
-Wear dry protective apparel: coat, shirt, gloves and insulated footwear.
-Insulate yourself from the work piece. Avoid contacting the work piece or ground.
- Do not attempt to repair or maintain the welder while the power is on.
-Inspect all cables and cords for any exposed wire and replace immediately if found.
-Use only recommended replacement cables and cords.
-Always attach ground clamp to the work piece or work table as close to the weld area as possible.
-Do not touch the welding wire and the ground or grounded work piece at the same time.
-Do not use a welder to thaw frozen pipes.

Fumes and Gases

⚠WARNING

-Fumes emitted from the welding process displace clean air and can result in injury or death.
-Do not breathe in fumes emitted by the welding process. Make sure your breathing air is clean and safe.
-Work only in a well-ventilated area or use a ventilation device to remove welding fumes from the environment where you will be working.
-Do not weld on coated materials (galvanized, cadmium plated or containing zinc, mercury or barium). They will emit harmful fumes that are dangerous to breathe. If necessary use a ventilator, respirator with air supply or remove the coating from the material in the weld area.
-The fumes emitted from some metals when heated are extremely toxic. Refer to the material safety data sheet for the manufacturer’s instructions.
-Do not weld near materials that will emit toxic fumes when heated. Vapors from cleaners, sprays and

degreasers can be highly toxic when heated.

UV and IR Arc Rays

⚠ DANGER

The welding arc produces ultraviolet (UV) and infrared (IR) rays that can cause injury to your eyes and skin. Do not look at the welding arc without proper eye protection.

-Always use a helmet that covers your full face from the neck to top of head and to the back of each ear.

-Use a lens that meets ANSI standards and safety glasses. For welders under 160 Amps output, use a shade 10 lens; for above 160 Amps, use a shade 12. Refer to the ANSI standard Z87.1 for more information.

-Cover all bare skin areas exposed to the arc with protective clothing and shoes. Flame-retardant cloth or leather shirts, coats, pants or coveralls are available for protection.

-Use screens or other barriers to protect other people from the arc rays emitted from your welding.

-Warn people in your welding area when you are going to strike an arc so they can protect themselves.

Fire Hazards

⚠WARNING

Do not weld on containers or pipes that contain or have had flammable, gaseous or liquid combustibles in them. Welding creates sparks and heat that can ignite flammable and explosive materials.

-Do not operate any electric arc welder in areas where flammable or explosive materials are present.

-Remove all flammable materials within 35 feet of the welding arc. If removal is not possible, tightly cover them with fireproof covers.

-Take precautions to ensure that flying sparks do not cause fires or explosions in hidden areas, cracks or areas you cannot see.

-Keep a fire extinguisher close in the case of fire.

-Wear garments that are oil-free with no pockets or cuffs that will collect sparks.

-Do not have on your person any items that are combustible, such as lighters or matches.

-Keep work lead connected as close to the weld area as possible to prevent any unknown, unintended paths of electrical current from causing electrical shock and fire hazards.

-To prevent any unintended arcs, cut wire back to ¼" stick out after welding.

Hot Materials

⚠ CAUTION

Welded materials are hot and can cause severe burns if handled improperly.

-Do not touch welded materials with bare hands.

-Do not touch MIG gun nozzle after welding until it has had time to cool down.

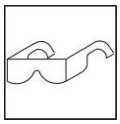

Sparks/Flying Debris

⚠ CAUTION

Welding creates hot sparks that can cause injury. Chipping slag off welds creates flying debris.

-Wear protective apparel at all times: ANSI-approved safety glasses or shield, welder's hat and ear plugs to keep sparks out of ears and hair.

Electromagnetic Field

⚠ CAUTION

-Electromagnetic fields can interfere with various electrical and electronic devices such as

pacemakers.
-Consult your doctor before using any electric arc welder or cutting device
-Keep people with pacemakers away from your welding area when welding.
-Do not wrap cable around your body while welding.
-Wrap MIG gun and ground cable together whenever possible.
-Keep MIG gun and ground cables on the same side of your body.

Shielding Gas Cylinders Can Explode

⚠WARNING

High pressure cylinders can explode if damaged, so treat them carefully.
-Never expose cylinders to high heat, sparks, open flames, mechanical shocks or arcs.
-Do not touch cylinder with MIG gun.
-Do not weld on the cylinder
-Always secure cylinder upright to a cart or stationary object.
-Keep cylinders away from welding or electrical circuits.
-Use the proper regulators, gas hose and fittings for the specific application.
-Do not look into the valve when opening it.
-Use protective cylinder cap whenever possible

1.5 Proper Care, Maintenance and Repair

⚠ DANGER

-Always have power disconnected when working on internal components.
- Do not touch or handle PC board without being properly grounded with a wrist strap. Put PC board in static proof bag to move or ship.
-Do not put hands or fingers near moving parts such as drive rolls of fan

INVERMIG WI SERIES USE AND CARE

- **Do not modify the INVERMIG WI SERIES in any way.** Unauthorized modification may impair the function and/or safety and could affect the life of the equipment. There are specific applications for which the **INVERMIG WI SERIES** was designed.
- **Always check of damaged or worn out parts before using the INVERMIG WI SERIES.** Broken parts will affect the **INVERMIG WI SERIES** operation. Replace or repair damaged or worn parts immediately.
- **Store idle INVERMIG WI SERIES.** When **INVERMIG WI SERIES** is not in use, store it in a secure place out of the reach of children. Inspect it for good working condition prior to storage and before re-use.

Product Description

INVERMIG WI series IGBT inverting MMA/MIG/MAG welding power, is an inverter DC semi-automatic welding machine, which is widely used in automation, metal furniture manufacturing, shipyard, pressure container manufacturing and steel construction industries. This machine employs IGBT module and fast recovery diode as main parts for power transition and transfer. Through feedback control, the output of the power supply is very stable, and the output voltage is continuously adjustable.INVERMIG 350WI/500WI/630WI series can according to different wire diameter at the same time complementary with the corresponding waveform control circuit, therefore, in welding dynamic characteristics, spatter, weld formation and welding efficiency, compared with the previous products have improved significantly, and welding quality is more guaranteed. The control scheme designed uniform adjustment of welding current, welding voltage and dynamic characteristics of regulation, and have overheating and over-current protection circuit, the welding power source has good adaptability and reliability of welding quality. The range of welding current adjustment of this series of products is INVERMIG-350WI INVERMIG-500WI and the compensation capacity of the power grid is not less than 15% (industry requirements 10%). The anti-interference ability is strong, and the control system can respond to the change of the power grid, the work piece, the welding wire, the manual operation etc under the time of less than 1ms, and maintain the stable output voltage.

INVERMIG 350WI/500WI Series IGBT Inverting MMA/MIG/MAG semi-automatic welder main characteristic as follows:

- IGBT inverter control technology, inverter frequency as high as 20KHZ, power saving, quick response;
- Closed loop feedback control, stable output voltage, strong anti voltage fluctuation (15%);
- Continuous welding voltage adjustment, accurate match to the different welding current, excellent welding property; Under unified mode according to the welding current automatic matching of the corresponding welding voltage.
- Patented welding waveform control circuit, stable welding arc, less spatter, beautiful welding seam and high welding efficiency.
- Have self holding/the crater-arc function operation, meet different welding requirements;
- Have the functions of welding and cutting small balls, eliminating the drop ball at the end of the welding wire, and adopting the patented arc-start control scheme to improve the success rate of the once arc-start, and is more suitable for continuous spot welding users;
- Have CO2, MAG, MIG welding;
- Suitable for wire materials HO8Mn2Si、HO8MnSi、HO4MnSiAlTiA、H18CrMnSiA、HO8CrMn2SiMo、H10MnSiMo、H10MnSiMoTi with diameter Φ0.8 ～Φ1.6;
- Low weight, small volume and high efficiency;
- According to the CISPR11 requirements, the electromagnetic compatibility of the equipment is classified as: Class A.

If the contents of this specification are incorrect or the welder's function has been changed, we will

change the specification at any time without prior notice.

Safety Operation

Operator's Self-protection

*Please always follow the rules that conform to safety and hygiene.

Wear protective garments to avoid injuries to eyes and skins.

* Use the welding helmet to cover your head while working with the welding machine. Only by viewing through the filter lens on the welding helmet can you watch your operation.

* Do not contact with the "+", "-" pole (the welding pole and the workpiece pole) without any insulation protection.

Attention

*INVERMIG-WI series inverting MMA/MIG/MAG welder belongs to electronic products, and the components used are more delicate. When switching or modulating, it should not be forced too much to damage to the device.

* Check the connection to see if the welder input and output cables are well connected, whether the earth (ground) connection is reliable, etc.

* The smoke during welding is not good for the health. It should be performed in the place where have ventilation or smoke exhaust facilities.

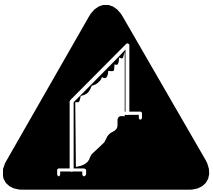

* Arc light during operation will interfere with others, please note the arc light

* During operation, no other person can modulate the welder or shift the welder.

* Welders have strong electromagnetism and frequency interference, so keep away people with heart pace or the articles which can be interfered by electromagnetism and frequency.

* This machine shall be used by personnel with welding expertise and welders' certificates issued by provinces, cities and regions.

Installation and Safety Protection

* Precaution must be taken to keep the operator and the machine from the foreign materials falling from up above.

* The dust, acid and erodible dirt in the air at the job site can not exceed the amount required by the mode (excluding the emission from welding process).

* The welder must be installed in the place where it can not be exposed to sun and rain. Also it must be stored in less humid place with the temperature range at －10 ～ 40℃.

* There should be 50㎝ space about for the welding machine to have good ventilation.

* Make sure that there is no metal-like foreign body to enter the welding machine.

* No violent vibration in the welder's surrounding area.

* Make sure that there is no interference with the surrounding area at the installation site.

* The power supply network of the welder shall be adequate for the welding machine to work properly, and the power supply for the welder shall be equipped with a safety protection device.

* If the welder is placed in a tilted plane beyond 10 degrees, attention to prevent it from dumping.

Safety checking

Each item listed below must be carefully checked before operation:

* Make sure that the welding machine has reliable earth connection.

* Make sure the output ends of the welder are not short circuited (the output is directly shorted);

* Make sure that there is always sound output and input wire connection instead of exposing it outside.

Regular check needs to be conducted by the qualified personnel after the welder has been installed over a period of six months, which involves as follows:

* Routine cleaning needs to be done to make sure that there is no loose parts happening in the welder.

* The parts installed on the panel must guarantee that the welder works properly.

* Check the welding cable to see if it can continue to be used before it is worn out.

* Replace the welder's input cable as soon as it is found to be broken or damaged.

Notice: Cut off the power supply before opening the case to check!

Please do not hesitate to contact us for technical assistance whenever you come across the problems that you can not work out or you may deem difficult to fix.

Remote operation:

In long distance operation, it is difficult for operator to monitor welding machine and welding cable because of man-machine separation, so it must be done before welding:

* Increase the cross section of the welding cable to ensure that the cable is not too hot during welding.

* Strengthen the protection of welding cables and cable remote control, to ensure that it is not being injured, crush damage.

* In the welding machine installation place, do "welding machine is using, do not move" and other warning words, to inform others not to operate welder.

Technical Specifications

Working Environment

* The surrounding temperature range: when welding: -10 ～ + 40℃,

During transport or in storage: - 25 ～ + 55℃.

When welding, the angle of inclination of the machine shall not exceed 10 degrees, or it should be fixed to prevent it from dumping.

* Relative humidity: when at 40℃: ≤50%, when at 20℃: ≤90%.

* The dust, acid and erodible materials in the air cannot exceed the amount required by the mode (apart from the emissions from the welder). No violent vibration at the job site.

* Altitude no more than 1,000m.

* Well ventilation: at least more than 50cm spacing around the welder.

* Keep from raining when it is used outdoor.

* The wind speed should no more than 1m/s around the operation places.

Requirement for Main Supply

* The waveform of the supply voltage shall be the actual sine wave, and the frequency fluctuation shall not exceed + 1% of its rated value.

* The oscillation of the supplied voltage should not exceed ±15％ of the rated value.

Main Principle

The welder receive 3~xxxV AC through air switch (SW1), rectify the current by 3 phases rectifier(BR1), get DC through capacitance C5 & C9 to filter wave, the current will be transited to 20KHz AC by IGBT (IGBT 1, IGBT 2), then go to middle frequency transformer (T1) , fast recovery diode (D1, D12), and output reactor (L0). Finally the machine will have stable DC output for welding.

Main construction

INVERMIG-WI（MMA/MIG/MAG）series IGBT inverting semi-automatic welder adopts movable case structure: the upper part of front panel includes digital current meter, voltage meter, arc ending welding current adjusting knob, arc ending welding voltage adjusting knob, inductance control adjusting knob, welding function selector switch, gas ending arc mode selector switch, wire diameter adjusting knob, extension line control selector switch, gas checking selector switch, power indicating light, protection indicating light, working light, all of the above components are integrated into the control panel circuit board.

The lower part of front panel includes “+” socket, “-” socket, socket of connecting cable of wire feeder. The back panel includes power cable, ground bolt, and socket of gas heater, Power switch, Fan. The bottom of the welder is provided with four rollers, and host ring and handle on the top of machine. For inside machine, the upper part includes control transformer, 4pcs PCB. 3phase rectifier bridge,2 IGBT, below have main transformer, the lower part includes secondary fast recovery diode, radiator and electric reactor, The power component of radiator is installed in the middle of machine.

The wire feeder includes motor, speed reducer, wire feeder roll, spool, gas valve, cable connector, gas hose, welding current potentiometer, welding voltage potentiometer, spot welding switch, etc.

Air torch

The welding torch is composed of a torch seat, a hollow cable, a wire feeding hose, a welding handle, a conductive mouth seat, a conducting mouth, a diverter, a nozzle, etc. The wire feeding hose is covered with nylon tube and arranged in the middle of the hollow cable. The wire feeding hose is a wire feeding passage, and between the wire feeding hose and the nylon tube is the passage of protective gas, and the hollow cable is the passage of the current. The torch seat is the interface connected with torch and wire feeding equipment, the gooseneck is arranged inside the torch handle, the rear of torch handle is connected to the hollow cable and the front is connected diverter. The protective gas flows into the diverter to split, and a uniform protective air flow is formed in the nozzle, which is ejected by the nozzle to form a laminar flow protective air curtain. The welding handle is provided with a micro-switch, which can control the on-off of the welding current.

Welder Type Coding

* Combination of the Chinese mandarin spelling and the Arabic numerals.

* Implication of Coding:

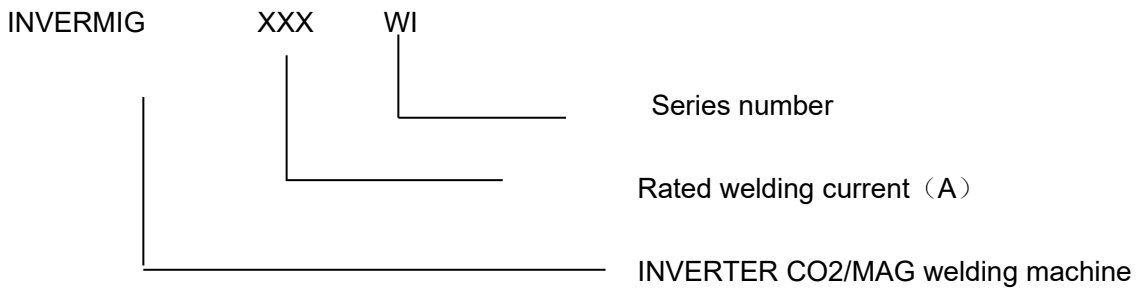

Technical data

product model		INVERMIG 350WI	INVERMIG 500WI
Power voltage	V	220	220
Frequency	Hz	50/60	
Rate input current	A	45	71
Rate input capacity	KVA	16.8	26.4
OCV	V	73	79
Current range	A	30～350	30～500
Voltage range	V	15.5～31.5	15.5～39
Duty cycle	%	60	
Wire diameter	mm	Φ1.0～1.2	ϕ1.0～1.2
Arc-starting Mode		Patented arc-starting control scheme for high no-load slow feed wire	
Efficiency	η	85%	
Power factor	Cosφ	0.92	
Insulation class		H	
Shell protection class		IP21S	
Cooling		Air	

Applied Standard

The INVERMIG WI series welder is produced in accordance with the following standard:

* EN 60974-1

Indicating light

* Only Green light on: the machine have input the power； The red light on: the machine on the welding.

*Green light on, yellow light on: The machine is overheated. The machine will go back to working condition, if the inner temperature of machine returns to the allowed level.

Arc ending

Usually there is a crater at the end of welding and called Arc crater. It is due to the arc pressure and condensing shrinkage of melted metal. The higher arc, the bigger crater. Arc crater is a kind of welding defect, to improve welding quality, the arc ending function will fill up the crater by arc ending current (less than 40%-70% of welding current) and improve the welding quality.

Soft wire feeding

In order to get the satisfying welding quality, the machine feed the wire at preset low speed before wire touch the work piece. When the arc is established, the welder switches to the normal welding state immediately，

It means striking arc fail if the current is not detected during this stage. This kind of striking arc mode can improve the success of striking arc and ensure the reliable and stable arc. If this period of time the arc current is not detected that arc-starting is not successful, to timely aspirated state, the arc way to generate reliable and stable arc, improve the success rate of arc.

Burn back time

When the trigger of torch is switched off, the wire feeding will continue because of inertia. So the wire will go out to the top end of torch after the welding. It will cause the stick of wire to the work piece, thus bring the arc-starting difficulty to the next welding. The burn back is set in the machine to solve this problem. The machine will keep output voltage during certain time to keep wire burning, this period of time is the burn back time.

Waveform control

It means electronic reactor. It can adjust wire burning power by changing the rate of the current change when the wire is short circuited, to reduce the spatter.

Ball cutting

Usually there is a big droplet at the end of wire after welding. And slag will stick on the low surface of the droplet. It will cause difficulty of striking arc. The ball cutting circuit is designed to cut the droplet automatically after welding.

Post-gas

In order to protect the hot welding area，1 seconds post-gas time is set to protect the welding area after welding.

Remark & sign


Ground


MIG/MAG Welding

AC 3-phase Power Supply

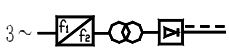

3-phase Static frequency converter— Transformer—Rectifier


Direct Current

＋ ：Current output positive pole

－ ：Current output negative pole

X：Duty Cycle

I1max...A：Rated Maximum Input Current

I1eff...A：Maximum Virtual Input Current

I2：Rated Welding Current

U0：Rated No-load Voltage

U1：Rated Input Voltage

U2：Conventional load voltage

~50/60Hz：AC, Rated Frequency = 50Hz，Can use frequency 60Hz.

...V：Voltage Unit (Volt)

...A：Current Unit (Ampere)

...KVA：Power Unit (KVA)

...%：Duty Cycle Unit

...A/...V~...A/...V：Output Range. Rated minimum and maximum welding current and related load voltage.

IP21S：Shell Protection Class. ‘IP’ is the code of International Protection. ‘2’ mean preventing user’s finger from the dangerous parts; preventing the solid material with the diameter no less than 12.5mm into the box. ‘1’ means preventing water dropping vertically which is harmless. ‘S’ means water proof test is conducting while the movable parts are standstill.

F：F Insulating Grade.

Installation and commissioning

The protection class of INVERMIG-WI Series Inverting semi-automatic Gas Welder is IP21S. It is forbidden to put in a finger or insert a round bar less than 12.5mm (metal bar in particular) into the welder. No heavy force can be employed on the welder.

Connection to power supply

* The power input line of the rear panel of the welder is connected into a three-phase 220V power supply (electric network) equipped with a circuit breaker;
* A safety earthing bolt at the lower part of the welder's rear panel is reliably connected with the ground wire of the power grid by using a wire not less than the input section area of the welder.

Note：Power grid grounding is not zero connection of power network

* The power supply for single welder:

Project	INVERMIG 350WI	INVERMIG 500WI
Air switch（A）	≥60	≥100
Fuse (rated working current) A	60	100
Knife switch（A）	≥60	≥100
Power cable（mm^2）	≥10	≥16

Remark：he fusing current shall be 2 times to rated working current.

Installation and connection of wire feeder

Open the spool cover and put the wire on the spool. The wire shall turn counter-clockwise. There is a damp adjusting device in the wire spool. During rough adjustment, the wire can be pulled by hand. Please adjust damp bolt counter-clockwise, if the resistance is too strong, and vice versa. After adjustment, spin the axle cover.

Please check the wire feeder roll carefully and make sure the correct roll and conductive nozzle is used(Such as: 0.8mm wire, using 0.8mm tip and 0.8 wire slot, 0.6, 0.9, 1, 1.2... And so on). Otherwise it will lead to unstable welding, poor forming and so on.

Feed wire to guiding liner of wire feeder, go through roll, align the wire roller through the wire feed wheel, pull-in socket conductive nozzle again, and then press down the roll to tight.

Connection to wire feeder

The connector of the connecting cable is connected to the current "+" pole copper under the front of the welder, and firmly connected with the bolt, and the copper joint at the other end is firmly connected with the connecting terminal of the wire feeding device by bolts.

Connect welding machine and wire feeder respectively through the joint of 7-core control cable.

Connection gas supply

Gas regulator in the attached accessories is installed and screwed firmly on the gas bottle to prevent air leak.

Connect and firmly screw the two core plug of heater cable on the gas regulator to “Heater Socket” on the rear board of welder. The gas hose in the attached accessories, one end connected with the outlet of the inlet flow, and the other end of the wire feeding device of pipe joint, both ends of the screw with hose clamps.

Connection work piece

Connect the earth cable of the earth clamp to the current "-“pole below the front panel of the welder and connect it firmly with bolts and clamp the ground to the work piece.

Connection of cables

* For gas protection welding, connect wire feeder to the “+” output of welder, connect earth cable to “-“output of welder.

* For flux core welding, connect wire feeder to the “-“output of welder, connect earth cable to “+” output of welder, to get well welding effect.

Commissioning

* Check all connections and make sure all connections and earth are correct before switching on

machine.

*Switch on machine after make sure all connections are correct, press gas checking switch and checking gas indicator will light, adjust gas regulator to get required gas flow, then press gas checking switch again to make checking gas indicator die.

* Press inching switch on the wire feeder or torch trigger, to feed the wire to the end of torch.

* Test welding, adjust the knobs to set welding current adjustment, welding voltage adjustment knob, arc ending current adjustment, arc ending voltage adjustment knob.

* Welding work can be carried out after all the above settings have been completed.

⚠ Note：Iron plate and other bad conductor can not be used to connect machine to work piece.

Operation

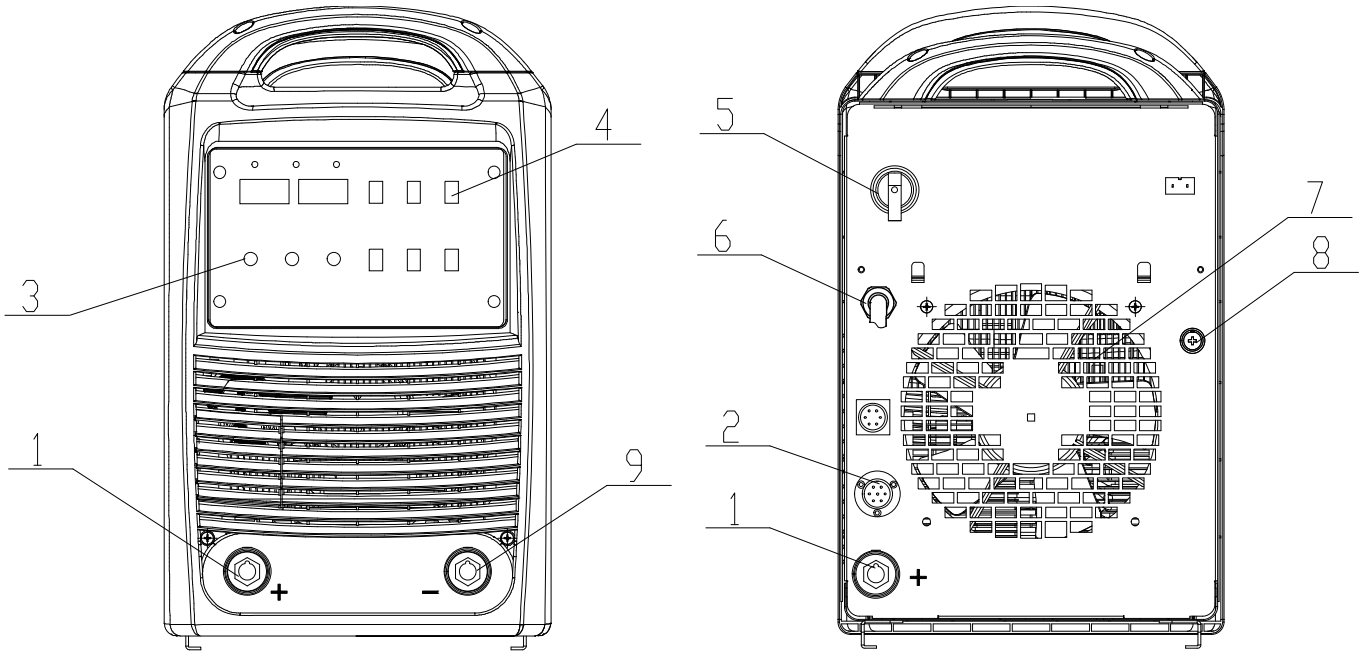

Fig.4 Front and back panel of welding machine

(1) Socket (＋): Connecting Welding cable to wire feeder.

(2) Control socket for wire feeder：Connecting wire feeder control cable

(3) Potentiometer knob：adjust current size

(4) Rocker switch：Function key choose.

(5) Air auto switch：When the machine overload or other trouble, it will power off suddenly, it is can protect the machine. Normally, the switch turns up to the point where it is connected. Start and stop welding machine should use the power switch on the switchboard (switchboard) as far as possible, and don't use the switch as power switch.

(6) Hoop

(7) Fan

(8) Power fuse(3A) , High voltage, when changed should be cutting the power

(9) Socket (-): Connecting output cable to work-piece.

Wire feeder panel function adjustment

The controller is mounted on the wire feeder and the panel is shown as Fig6.

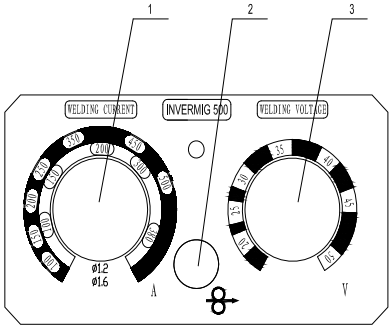

（ Fig6） Controller panel

(1) Current adjustment knob：for the current

(2) Manual wire feeder button: for the wire

(3) Voltage adjustment knob：for the voltage

Control Panel GUI

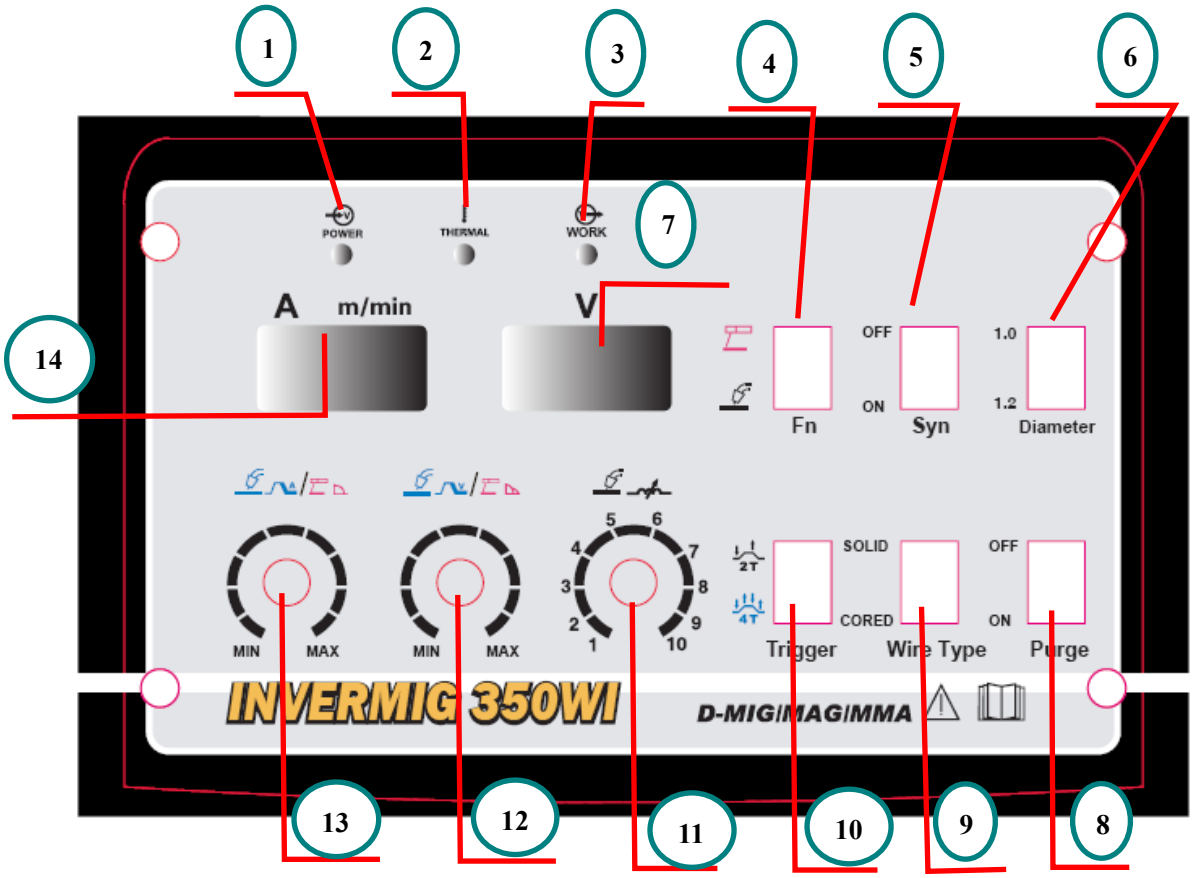

（1） Power indicator (green): when the light is on, the welder is power on.

（2）Protection indicator (yellow): when the light is on, the welder is in abnormal state of protection. There are two kinds of abnormal overheating and over voltage.

（3）Working indicator light (red): when the light is on, the welder is in working state, and the output has voltage or current.

（4）Welding function switch: optional MMA (manual welding) and MIG/MAG (gas shielded welding) function.

（5）Parameter adjustment switch

（6）Selection of wire diameter switch: Φ1, Φ1.2 can be selected.

（7）Voltmeter：For MMA thrust preset, as well as gas welding voltage preset, shows the actual voltage.

（8）Gas checking switch

（9）Welding wire selection: flux cored wire or solid core welding wire.

（10）crater-arc Switch mode: select crater-arc mode

（11）Electronic reactance adjustment knob: used to regulate arc characteristics.

（12）crater-arc voltage adjustment knob: Adjust arc force for MMA; arc voltage regulation for gas protection welding.

（13）crater-arc current adjustment knob: Adjust welding current for MMA; crater-arc current regulation (wire feeding speed) for gas protection welding.

（14）Current indictor：adjust current for MMA and wire feeing speed for gas protection welding.

Arc ending

（1）Use of arc ending mode

When arc ending indicator light, the operator shall adjust and set welding current, arc ending current, welding voltage, and arc ending voltage. (Usually the arc ending current is less then welding current, the valve shall be set according to the crater.). The procedure is: press torch trigger under high OCV condition for inching feeding, enter welding state after arc is set up, (the values on the current meter and voltage meter is welding current and welding voltage), now release the gun switch and the arc will continue to burn; Press the trigger again after welding, then the machine is under arc ending condition (the values on the current meter and voltage meter is arc ending current and arc ending voltage), release the trigger after the crater is filled up, then arc stop.

（2）No arc ending function

When arc ending indicator die, entering welding state. The operator shall adjust and set welding current and welding voltage. The procedure is: press torch trigger under high OCV condition for inching feeding, wire will keep burning after arc is set up, (the values on the current meter and voltage meter is welding current and welding voltage), release the trigger after welding, then arc stop.

Use of extension line

When users use the cable positive output is not less than 15 meters , shall put extension line switch to "yes", the control system has the function of compensation for extended cable power output, to ensure that welding performance is not affected in the welding process.

When adding extension line control, the seventh core wire of the 7 core control wire on the wire feeder shall be shorted to the positive input cable interface of the wire feeder.

Waveform control

After setting welding current and welding voltage, please adjust electronic reactance adjustment knob to reduce the spatter, if the spatter is too big.

MMA function

When MMA light is on, enter MMA function status. In this state, it is necessary to adjust the welding current and thrust to perform manual welding.

ATTENTION:

* Outer ring indicator value of the welding voltage and arc ending voltage is not voltage

value, but a qualitative index, it is specified in the direction of adjustment.

* The waveform control adjustment indicator is not a quantity value, but a qualitative index, indicating the direction of adjustment.

Maintenance

The biggest difference between inverting welder and traditional welder is employing a large number of modern electronic components, and the technology is high and belongs to the high-tech products, so the technical requirements of the maintenance personnel are relatively high, because of a small number of wear and tear components, so in addition to the daily appearance of cleaning work, only to regular maintenance. Welding machines shall be maintained by professional personnel. When the user is unable to get rid of the fault or lack of maintenance capabilities, should promptly contact with the manufacturer or supplier, access to technology, repair, and parts supply services and support.

Maintenance job:

* Cleaning:

Professional maintenance personnel use regularly dry compressed air (using air compressor or leather tiger) to clean the welding machine internal dust, at the same time pay attention to check the machine fasteners and connections loose or not, excluded abnormal condition. Dust is usually removed once a year, In case of heavy dust, dust is removed quarterly or even two times.

* Keep the welding cable plug in good contact

Check usually the contact condition of the welding cable plug. In fixed use, at least once a month shall be checked by the operator, and shall be checked before move use.

attention： * The main circuit voltage of the welder is higher, and the safety precautions against accidental electric shock should be done during the maintenance. People who are not professionally trained are strictly forbidden to open the case!

* Cut off power before cleaning

* Do not tamper with connection line or components during cleaning.

Attention：

* When the working time of the welder is too long, the protection indicator on the panel is bright, indicating that the internal temperature rise of the welder, has exceeded the allowable value of the design temperature, and should be suspended at this time. After a period of time, the interior of the welder is cooled down, and the protective indicator lamp die before continue to be used;

* Switch off the power switch when the work is finished or temporary leave the welding site;

* Welders shall wear work clothes and electric welding masks to protect against arcing and heat radiation;

* Screens should be placed around the work site to prevent other people from being affected by arcing;

* No inflammable or explosive materials be placed near the work site;

* The welding machine interfaces must be properly true and reliably connected.

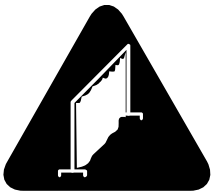

Trouble Shooting

* The defects of welding bead

Welding bead defects	Reason	Solution
Air hole	There is too much oil, rust or water on wire or work-piece	Clean the wire and work-piece
	Poor CO2 gas protection(less gas flow, gas is not pure, nozzles is blocked, gas leakage, too much wind	Improve the gas connection
	The silicon and manganese in wire is not enough	Change to suitable wire
Crack	The current and voltage doesn't match	Adjust the welding data
	too much water in the gas	change the gas flow
	there is too much oil, rust and water on wire or work-piece	clean the wire and work piece
Under cut	arc length is too small, and welding speed is too fast	increase the arc length and slow the welding speed
	torch location is not good and welding current is too small	adjust the torch location, and increase the welding current
	base plate groove is too deep	change the shallow plate groove
Slag Inclusion	the former molten slag of welding bead is not cleaned	remove molten slag
	small current, too much weld slowly deposition, to much swing during welding	increase the current and reduce the swing during welding
Big spatter	welding current and voltage doesn't match	Adjust the welding data
	There is too much oil, rust or water on wire or work-piece	clean the wire and work piece
	wire is streching too long outside the nozzle	press the torch closer to work-piece
	too big diameter of the nozzle	Change to suitable nozzle
Penetration is not enough	welding current is too small	Increase welding current
	wire is streching too long outside the nozzle	press the torch closer to work-piece
	groove is not good，too small angle，too small gap	change the welding technology process

* Common Failure of welding machines and solution

No.	Failure	Failure reason	Solution
F1	Fan is not turing	Fan is broken	Change the fan
		Loose connection	Check where is the loss connection and tighten it
		other	Contact the seller
F2	Protection LED is on	overheat of the internal machine	Wait till the temperature is coming down and light is off
		Thermal relay is broken	Change thermal relay
		other	Contact the seller
F3	Current and voltage no display	Current and voltage display is broken	Change the display
		Loose connection	Check where is the loss connection and tighten it
		Main control board is broken	Change the main control board
		Other	Contact the seller
F4	When press the torch button, the torch is not on	Torch switch is broken	Change the torch switch
		Cable connection is not connected	Contact the cable
		Control board is broken	Change or repair the control board
F5	No gas	Gas hose is blocked	Connect the gas
		Gas hose is press	Check the gas flow
		Electropneumatic value is broken	Repair or change the Electropneumatic value
		Control board is broken	Change or repair the control board
F6	Function is ok, but no wire feeding	Cable connection is not good	Connect the cable
		Motor is broken	Repair or change the motor
		Control board is broken	Change or repair the control board
F7	current button can not work	connection is not good or broken	Connect the cable
		Current button is broken	Change the button
		Other	Contact seller
F8	Fan is not turning or turning slowly	Input power lose phase	Check and get the normal input power
		Power switch is broken	Change the power switch
		Fan is broken	Change or repair the fan
		Connection cable is broken or lose	Check and repair
F9	No OCV	Overheat of internal machine	Change F2
		Power switch is broken	Change the power switch
F10	Machine or cable is over heating	Torch power is too small	Change the bigger power torch
		Cable is too small on diameter	Change the suitable cable

	“+” 、 “-”socket is overheating	Socket is loose	Remove the scale cinder and connect the socket
F11	Power supply is triping	power is off (more than 2 days)and get power on at first time	It is not failure, main curicut get power and triping, shall close the switch
		During welding operation	Contact seller

SPARE PARTS LIST

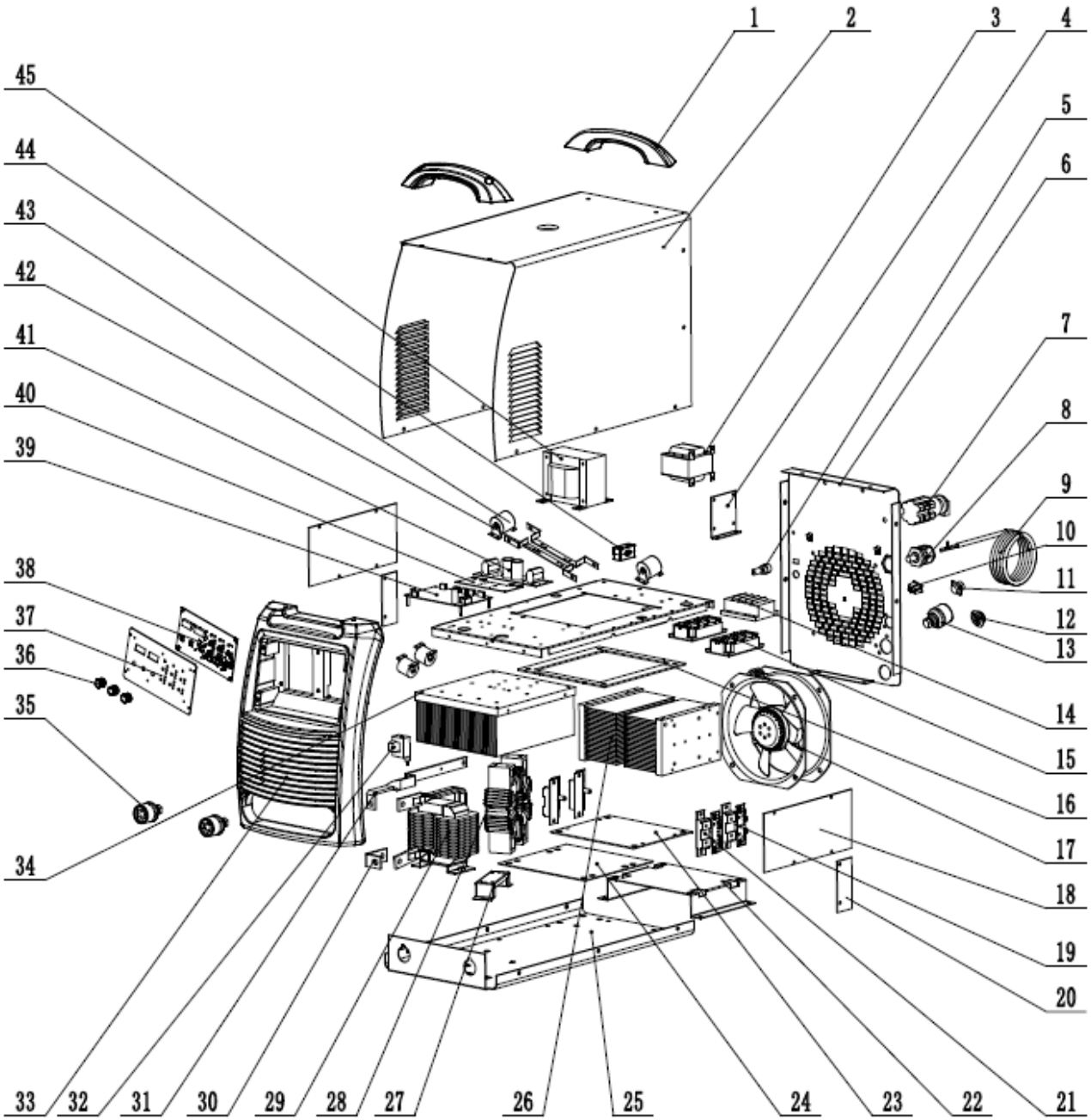

No	Code	English Name	Specifications	Qty
1	20050080052	plastic handle	INVERMIG 350WII||PM350.11.24PE33-1	2
2	11010011636	cover	INVERMIG 352WI/PM500.22.24DE34.1	1
3	20070500014	input reactor	ZX7-500WI/70-80uH/1KHZ/0.3V	1
4	11020012415	Reactor fixing plate	INVERDELTA 500WI/PE500.43.24A33.4-1	1
5	20070520004	fuse support	BF015 6.3A/250V	1
6	11010030479	back panel	INVERMIG 352WI	1
7	20070800051	unniversal change-over switch	LW26-32F/3 C55I 32A/440V	1
8	20040300009	cable fixed head	EG-21(PG21)	1
9	11120270025	power input cable	INVERMIG 352WI	1
10	20070570126	two core socket	DCZ-02 10A/250V 15A/125V	1
11	11100270004	Pump power supply harness	INVERMIG 500WII	1
12	20030304208	Aviation socket harness	INVERMIG 500WI/PM500.22.24DE34.23	1
13	20070570191	Euro quick connector	DKJ70-95	1
14	20070370027	Three-phase rectifier bridge	MDS100-14 100A/1400V	1
15	20070330006	IGBT module	GD150HFU60C1S	2
16	11020014075	Radiator insulation board	ZX7-500WI/PE500.40.24A33.4-1	1
17	20070890208	fan	200FZY6-S(22580) 80W/0.4A/AC220V 50/60Hz	1
18	11020014074	Radiator upper and lower connection row	ZX7-500WI/PE500.40.24A33-1	1
19	11050080026	Secondary absorption plate	NB500.4.2.1	2
20	11020014079	Radiator left and right windshield	ZX7-400WI/PE400.40.24A33.4.2-1	2
21	20070280142	Fast recovery diode	MMF300Y060DK1 300A/600V	2
22	11020015387	Radiator support plate	INVERDELTA 500WI/PE500.43.24A33.5-2	1
23	11020014078	Radiator lower windshield	ZX7-500WI/PE500.40.24A33.5-2	1
24	11020014080	Radiator connection plate	ZX7-500WI/PE500.40.24A33.5-1	1
25	11010041226	Bottom panel	INVERMIG 500WI/PM500.22.24DE34.5.1	1
26	20070430207	radiator	ZX7-500WI/PE500.40.24A33.5-5	2
27	11020014081	Transformer fixed plate welding	ZX7-400WI/PE400.40.24A33.4.8	1
28	20070250698	Intermediate frequency transformer	INVERMIG 352WI/T100*60*20/21:5:5/16.5KVA	1
29	11040030299	Output reactor	INVERDELTA 500WI/PE500.43.24A33.5.1	1
30	11010040595	Connection row	INVERDELTA 500WI/PE500.43.24A33.2-1	1
31	11010040596	output busbar	INVERDELTA 500WI/PE500.43.24A33.2-2	1
32	11110270062	hall	NB-500WI/PM500.40.24D33.21	1
33	20050050289	plastic front panel	PM350.11.24PE33.1-3/307*447.5*136	1

34	20070430206	IGBT radiator	ZX7-500WI/240*220*100/IGBT	1
35	20070570191	Euro quick connector	DKJ70-95	2
36	20070110022	potentiometer knob	KYZ20-16-6J	3
37	11020015482	Panel support plate	INVERMIG 500WI/PM500.22.24DE34.2-1	1
38	11050070226	panel	NB-500WI	1
39	11050020717	main control board	NB-350WI	1
40	11050110534	Drive gate plate	INVERMIG 500WI	1
41	11050080058	RDC absorption board	|ZX7-500WI	1
42	11030040214	IGBT busbar	INVERDELTA 500WI/PE500.43.24A33.5-1	2
43	20070120122	Filter capacitor	DMJ-MT 100uF±5%/800V.DC	4
44	20050170019	Crimping board	NB500.5-2	2
45	20070250702	Power Transformers	220V/240V/27*2/19*4/36V/20.52KVA	1

Schematic Circuit Diagram

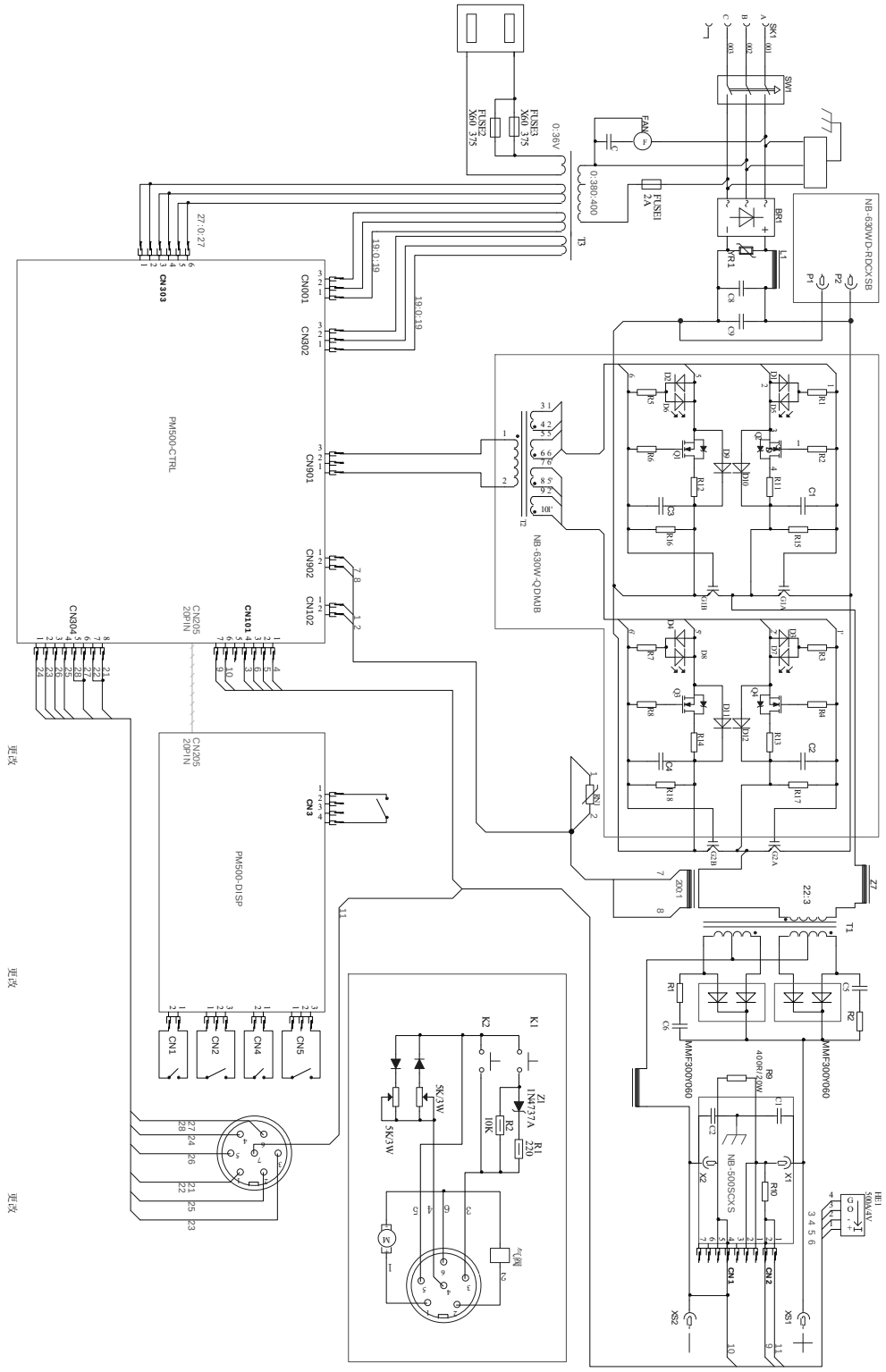

INVERMIG WI Series inverting semi-automatic gas welder main circuit diagram (The circuit diagram is for reference. Subject to change without notice)

Complete Set Specifications

1）INVERMIG WI IGBT inverting semi-automatic gas welding power 1 pc　　2） wire feeder 1pc

Accessories list

Description	INVERMIG 350WI		INVERMIG 500WI	
	Specification	Quantity	specification	Quantity
Torch	350A	1pc	500A	1 pc
Conductive nozzle	Φ1.0、Φ1.2	Each type 1pc	Φ1.2、Φ1.6	Each type 1pc
Gas regulator	36VAC	1 pc	36VAC	1 pc
fuse	3A	5 pcs	3A	5 pc
Gas hoop	10-16	1 pc	10-16	1 pc
Manual		1copy		1copy
Quality card		1 pc		1 pc
warranty card		1 pc		1 pc

The torch is with nozzles, liner. The wire feeder is with roller and liner

Description	INVERMIG 350WI	INVERMIG 500WI
Torch with nozzle	Φ1.0	Φ1.2
Torch with liner	1.2×1.8（black）	1.2×2.2（grey）
Wire feeder with roller	0.8-1.0	0.8-1.0

（Only reference，In case of change, the object shall prevail）

Remark： connection cable, earth cable, control cable and gas hose can be made according to customer's requirements.

3）Consumables parts description：

Torches, wire feeder liner, rollers, and carbon brushes are consumables parts and not covered by warranty terms.

Transport & Storage

* The machine shall used indoor, and during transportation, the machine shall be protected from rain and snow. During transportation, the handling shall performed according to warning. The warehouse shall be kept, dry, and with gas ventilation, and be proof from dust and corrosive gas. T he temperature shall be －25～＋55℃. And the humidity shall be less than 90%.

* When the machine carton is opened and the machine shall be stocker, the machine shall be packed with original carton (before storage, the machine shall be cleaned, and be packed with plastic bag)

* The users shall keep the carton and foam of the package. And it can be used during long distance transportation. If the delivery need transfer, the machine shall be packed with wood case. And the wood case shall be add the label of "up-ward""Rain-proof"

Quality commitment

The user in accordance with product instructions, in compliance with the machine installation, storage, use, maintenance, custody rules conditions, from the date of purchase within 12 months (invoice date), welding quality problems which occurred in local damage or can not work normally, the manufacturer will provide users with free services.